Tension levers with external thread, 20 degrees - inch

Item description/product images

INCH
Parts

lift to
disengage

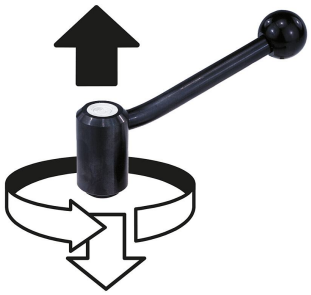

Application Diagram

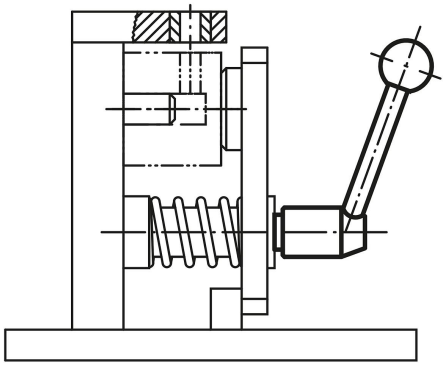

Description

Material:
Steel parts grade 5.8.
Ball knob black plastic.

Version:
Powder-coated with fine texture, black.

Order information:
Threaded studs with dimension L=70 mm or greater are partially threaded, 60 mm.

On request:
Other threads, screw lengths and special versions.
Dimensions “H1” and “A” available in other lengths at extra charge.

Drawing reference:
1) flat point DIN EN ISO 4753

© KIPP Inc.

Tension levers with external thread, 20 degrees - inch

Drawings

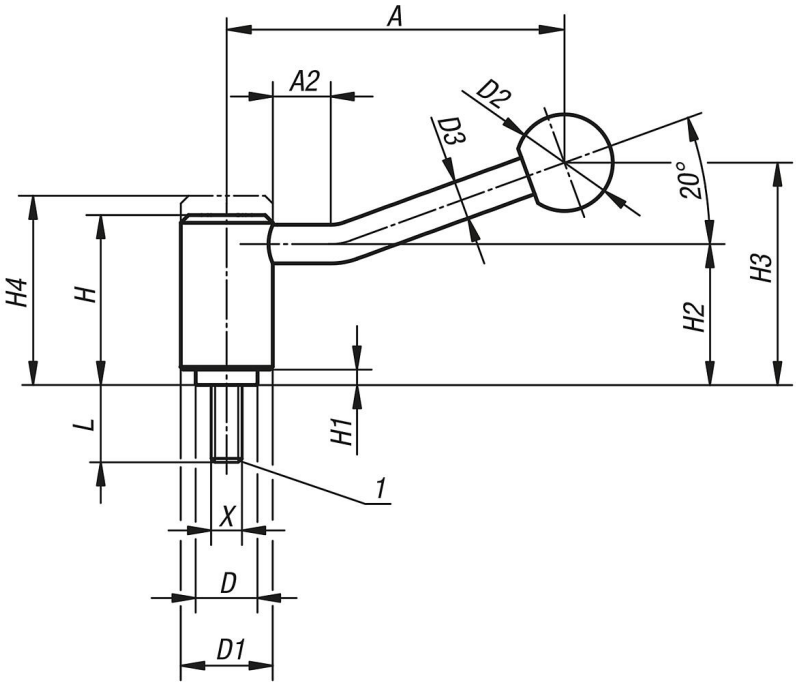

Order No.	style	X	L	A=Handle length	A2	D	D1	D2	D3	H	H1	H2	H3	H4	No. of teeth
K0108.1A31X20	20°	5/16-18	20	88	15	16	24	25	10	44,5	4,5	37	58,5	49,5	22
K0108.1A31X25	20°	5/16-18	25	88	15	16	24	25	10	44,5	4,5	37	58,5	49,5	22
K0108.1A31X30	20°	5/16-18	30	88	15	16	24	25	10	44,5	4,5	37	58,5	49,5	22
K0108.1A31X40	20°	5/16-18	40	88	15	16	24	25	10	44,5	4,5	37	58,5	49,5	22
K0108.1A31X50	20°	5/16-18	50	88	15	16	24	25	10	44,5	4,5	37	58,5	49,5	22
K0108.1A31X60	20°	5/16-18	60	88	15	16	24	25	10	44,5	4,5	37	58,5	49,5	22
K0108.1A41X20	20°	3/8-16	20	88	15	16	24	25	10	44,5	4,5	37	58,5	49,5	22
K0108.1A41X25	20°	3/8-16	25	88	15	16	24	25	10	44,5	4,5	37	58,5	49,5	22
K0108.1A41X30	20°	3/8-16	30	88	15	16	24	25	10	44,5	4,5	37	58,5	49,5	22
K0108.1A41X40	20°	3/8-16	40	88	15	16	24	25	10	44,5	4,5	37	58,5	49,5	22
K0108.1A41X50	20°	3/8-16	50	88	15	16	24	25	10	44,5	4,5	37	58,5	49,5	22
K0108.1A41X60	20°	3/8-16	60	88	15	16	24	25	10	44,5	4,5	37	58,5	49,5	22
K0108.1A51X20	20°	1/2-13	20	88	15	16	24	25	10	44,5	4,5	37	58,5	49,5	22
K0108.1A51X25	20°	1/2-13	25	88	15	16	24	25	10	44,5	4,5	37	58,5	49,5	22
K0108.1A51X30	20°	1/2-13	30	88	15	16	24	25	10	44,5	4,5	37	58,5	49,5	22
K0108.1A51X40	20°	1/2-13	40	88	15	16	24	25	10	44,5	4,5	37	58,5	49,5	22
K0108.1A51X50	20°	1/2-13	50	88	15	16	24	25	10	44,5	4,5	37	58,5	49,5	22
K0108.1A51X60	20°	1/2-13	60	88	15	16	24	25	10	44,5	4,5	37	58,5	49,5	22
K0108.2A51X20	20°	1/2-13	20	106	15	19	28	32	12	51,5	5,5	42	68,5	57,5	24
K0108.2A51X25	20°	1/2-13	25	106	15	19	28	32	12	51,5	5,5	42	68,5	57,5	24
K0108.2A51X30	20°	1/2-13	30	106	15	19	28	32	12	51,5	5,5	42	68,5	57,5	24
K0108.2A51X40	20°	1/2-13	40	106	15	19	28	32	12	51,5	5,5	42	68,5	57,5	24
K0108.2A51X50	20°	1/2-13	50	106	15	19	28	32	12	51,5	5,5	42	68,5	57,5	24
K0108.2A51X60	20°	1/2-13	60	106	15	19	28	32	12	51,5	5,5	42	68,5	57,5	24
K0108.3A51X20	20°	1/2-13	20	128,5	15	23	33	32	13	58	6	47	81	65	26
K0108.3A51X25	20°	1/2-13	25	128,5	15	23	33	32	13	58	6	47	81	65	26
K0108.3A51X30	20°	1/2-13	30	128,5	15	23	33	32	13	58	6	47	81	65	26
K0108.3A51X40	20°	1/2-13	40	128,5	15	23	33	32	13	58	6	47	81	65	26
K0108.3A51X50	20°	1/2-13	50	128,5	15	23	33	32	13	58	6	47	81	65	26
K0108.3A51X60	20°	1/2-13	60	128,5	15	23	33	32	13	58	6	47	81	65	26
K0108.3A61X20	20°	5/8-11	20	128,5	15	23	33	32	13	58	6	47	81	65	26
K0108.3A61X25	20°	5/8-11	25	128,5	15	23	33	32	13	58	6	47	81	65	26
K0108.3A61X30	20°	5/8-11	30	128,5	15	23	33	32	13	58	6	47	81	65	26
K0108.3A61X40	20°	5/8-11	40	128,5	15	23	33	32	13	58	6	47	81	65	26

© KIPP Inc.

Tension levers with external thread, 20 degrees - inch

Order No.	style	X	L	A=Handle length	A2	D	D1	D2	D3	H	H1	H2	H3	H4	No. of teeth
K0108.3A61X50	20°	5/8-11	50	128,5	15	23	33	32	13	58	6	47	81	65	26
K0108.3A61X60	20°	5/8-11	60	128,5	15	23	33	32	13	58	6	47	81	65	26
K0108.4A61X30	20°	5/8-11	30	128,5	15	30	41	32	13	68,5	7,5	56,5	89,5	76,5	36
K0108.4A61X40	20°	5/8-11	40	128,5	15	30	41	32	13	68,5	7,5	56,5	89,5	76,5	36
K0108.4A61X50	20°	5/8-11	50	128,5	15	30	41	32	13	68,5	7,5	56,5	89,5	76,5	36
K0108.4A61X60	20°	5/8-11	60	128,5	15	30	41	32	13	68,5	7,5	56,5	89,5	76,5	36
K0108.4A71X30	20°	3/4-10	30	128,5	15	30	41	32	13	68,5	7,5	56,5	89,5	76,5	36
K0108.4A71X40	20°	3/4-10	40	128,5	15	30	41	32	13	68,5	7,5	56,5	89,5	76,5	36
K0108.4A71X50	20°	3/4-10	50	128,5	15	30	41	32	13	68,5	7,5	56,5	89,5	76,5	36
K0108.4A71X60	20°	3/4-10	60	128,5	15	30	41	32	13	68,5	7,5	56,5	89,5	76,5	36

© KIPP Inc.