Spring Plungers with thread lock, pin style, slotted, steel, standard end pressure, metric

Item description/product images

METRIC Parts

Description

Material:
Sleeve in steel grade 5.8;
thrust pin in steel.
Spring grade D spring steel wire.

Thread lock nylon.

Version:
Black oxidized.
Thrust pin hardened.

Drawing reference:
L2 = approx. 2x thread pitch

Drawings

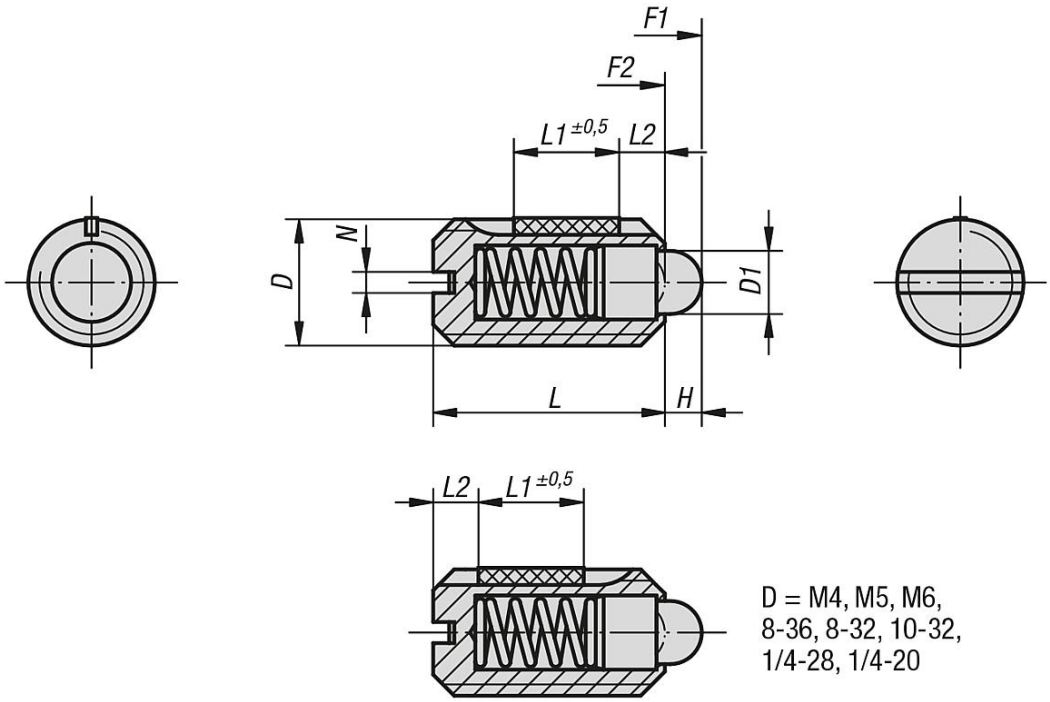

Item No.	D	D1	H	L	L1	N	Spring force initial pressure F1 approx. N	Spring force final pressure F2 approx. N	Tightening torque approx. Nm	Loosening torque approx. Nm
K0323.16	M16	8,5	4,5	24	14	2,5	45	100	3,95	3,05
K0323.08	M8	4	2	16	8	1,2	15	30	1,1	0,38
K0323.04	M4	1,8	1,5	9	5	0,6	6	20	0,18	0,12
K0323.12	M12	6	3,5	22	10	2	30	55	2,11	1,41
K0323.05	M5	2,4	2	12	6	0,8	6	20	0,12	0,08
K0323.10	M10	4,5	2,5	19	9	1,6	20	35	1,36	0,62
K0323.06	M6	2,7	2	14	7	1	7	20	0,44	0,21

© KIPP Inc.