Indexing Plungers with extended locking pin, Style B, metric

Item description/product images

METRIC Parts

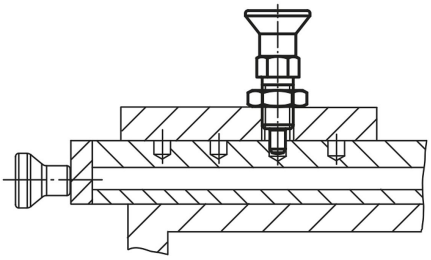

Description

Material:
Steel version
Indexing pin hardened:
grade 5.8.

Stainless steel version
Indexing pin hardened:
Threaded body 1.4305 (AISI 303 equivalent).
Indexing pin 1.4034 (AISI 420 equivalent).

Indexing pin not hardened:
Threaded body 1.4305 (AISI 303 equivalent).
Indexing pin 1.4305 (AISI 303 equivalent).

Mushroom knob black-gray thermoplastic.

Version:
Steel version:
Indexing pin hardened, ground, black oxidized.

Stainless steel version:
Indexing pin hardened, ground and bright.
Indexing pin not hardened, ground and bright.

Note:
Indexing plungers are used to prevent any change in locking position due to lateral forces. A new locking position can only be set after the pin has been manually disengaged.

On request:
Special versions.

© KIPP Inc.

Indexing Plungers with extended locking pin, Style B, metric

Drawings

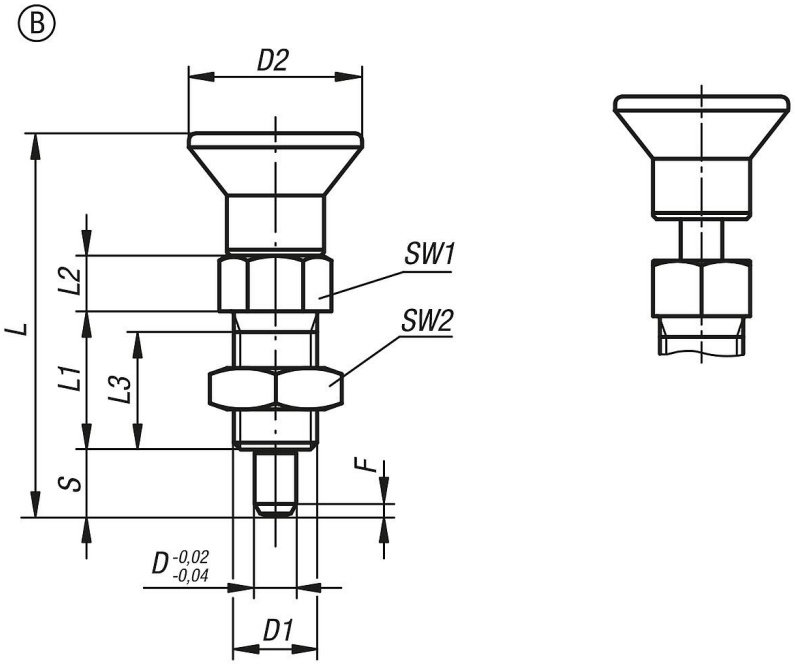

Order No. steel hardened	Order No. stainless steel hardened	Order No. stainless steel not hardened	style	D	D1	D2	L	L1	L2	L3	Travel S	SW1	SW2	Fx30°	Spring force initial pressure F1 approx. N	Spring force final pressure F2 approx. N
K0630.22903	**K0630.202903**	**K0630.212903**	B	3	M6x0,75	14	33	12	5	10	5	8	10	0,8	4,5	12
K0630.22004	**K0630.202004**	**K0630.212004**	B	4	M8x1	18	40,5	15	6	13	6	10	13	1	6	15
K0630.22105	**K0630.202105**	**K0630.212105**	B	5	M10x1	21	46,5	17	7	15	8	13	17	1,3	5	16
K0630.22206	**K0630.202206**	**K0630.212206**	B	6	M12x1,5	25	54,7	20	8	17	9	14	19	1,8	6	18
K0630.22308	**K0630.202308**	**K0630.212308**	B	8	M16x1,5	33	72	26	10	23	12	19	24	2,3	15	45
K0630.22410	**K0630.202410**	**K0630.212410**	B	10	M20x1,5	33	79	28	12	25	15	22	30	2,8	15	43
K0630.22412	**K0630.202412**	**K0630.212412**	B	12	M20x1,5	33	84	28	14	25	18	22	30	2,8	15	51
K0630.22516	**K0630.202516**	**K0630.212516**	B	16	M24x2	40	104	32	18	28	24	27	36	3,2	20	60

© KIPP Inc.