Two-Spoke Handwheels, aluminum, flat rim, with revolving handle, metric

Item description/product images

METRIC Parts

Description

Material:
Handwheels aluminum.
Cylinder grip black thermoset PF 31-DIN 7708, center pin electro zinc-plated steel.

Version:
Wheel rim turned and polished.

On request:
Hubs with square socket or powder-coated handwheels.

Drawings

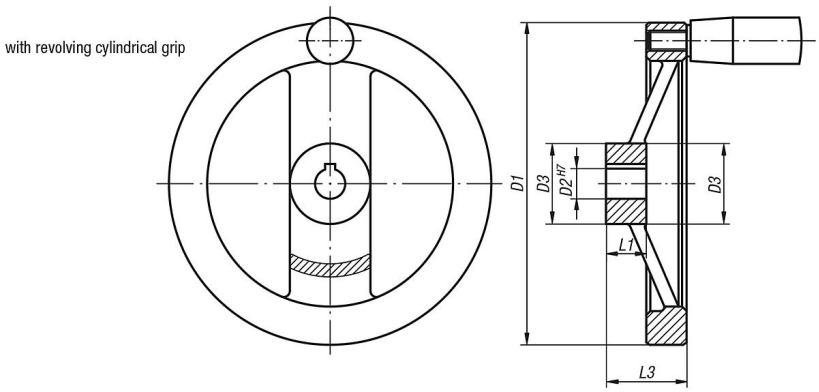

Item No.	D1	D2	D3	L1	L3	Revolving cylinder grip
K0162.4080X10	80	10H7	24	16	28	ø18 x M6 x 40
K0162.4080X12	80	12H7	24	16	28	ø18 x M6 x 40
K0162.4100X10	100	10H7	26	17	33	ø18 x M6 x 40
K0162.4100X12	100	12H7	26	17	33	ø18 x M6 x 40
K0162.4125X12	125	12H7	31	18	33,5	ø22 x M8 x 56
K0162.4125X14	125	14H7	31	18	33,5	ø22 x M8 x 56
K0162.4160X14	160	14H7	40	20	39	ø26 x M10 x 80
K0162.4160X16	160	16H7	40	20	39	ø26 x M10 x 80
K0162.4200X18	200	18H7	42	24	45	ø26 x M10 x 80
K0162.4200X20	200	20H7	42	24	45	ø26 x M10 x 80
K0162.4250X22	250	22H7	48	28	51	ø31 x M12 x 102
K0162.4250X26	250	26H7	48	28	51	ø31 x M12 x 102
K0162.5080X10	80	10H7	24	16	28	ø18 x M6 x 40
K0162.5080X12	80	12H7	24	16	28	ø18 x M6 x 40
K0162.5100X10	100	10H7	26	17	33	ø18 x M6 x 40
K0162.5100X12	100	12H7	26	17	33	ø18 x M6 x 40
K0162.5125X12	125	12H7	31	18	33,5	ø22 x M8 x 56
K0162.5125X14	125	14H7	31	18	33,5	ø22 x M8 x 56

© KIPP Inc.

Two-Spoke Handwheels, aluminum, flat rim, with revolving handle, metric

Item No.	D1	D2	D3	L1	L3	Revolving cylinder grip
K0162.5160X14	160	14H7	40	20	39	ø26 x M10 x 80
K0162.5160X16	160	16H7	40	20	39	ø26 x M10 x 80
K0162.5200X18	200	18H7	42	24	45	ø26 x M10 x 80
K0162.5200X20	200	20H7	42	24	45	ø26 x M10 x 80
K0162.5250X22	250	22H7	48	28	51	ø31 x M12 x 102
K0162.5250X26	250	26H7	48	28	51	ø31 x M12 x 102

© KIPP Inc.