Spring Plungers with thread lock, pin style, slotted, stainless steel, light end pressure, inch

Item description/product images

Description

Material:
body 1.4305 (AISI 303 equivalent).
Thrust pin 1.4034 (AISI 420 equivalent).
Spring 1.4310 (AISI 301 equivalent).

LONG-LOK thread lock Nylon.

Version:
Bright.
Thrust pin hardened.

Note:
For the inch series, dimension D is in inches, all other dimensions are in mm.

Drawing reference:
L2 = approx. 2x thread pitch

Drawings

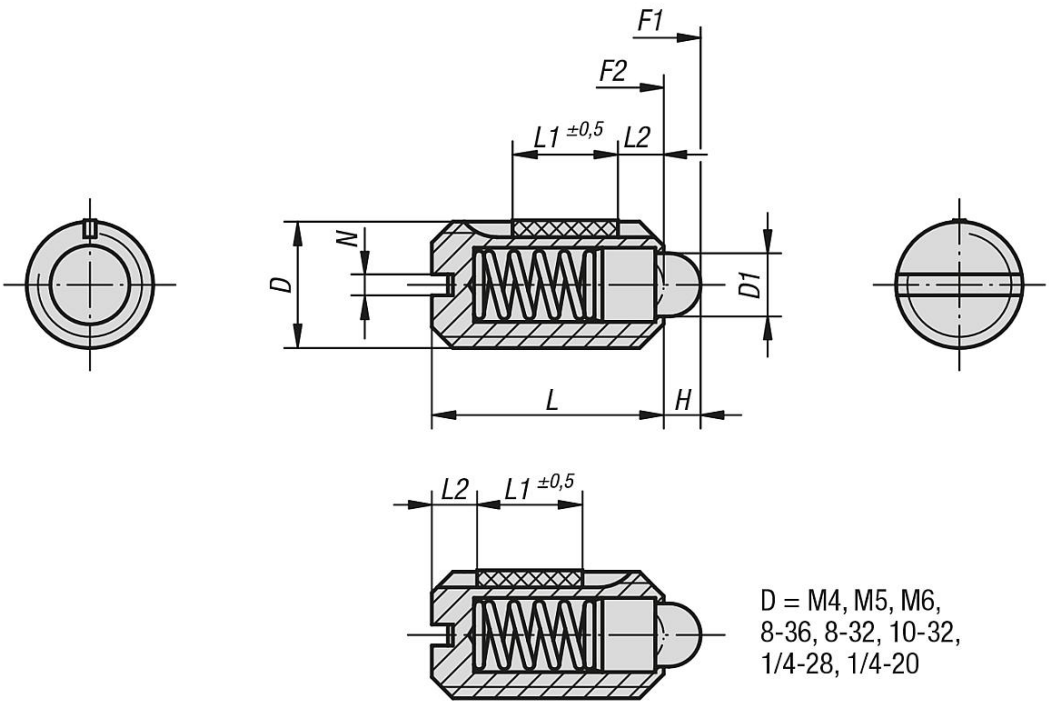

Item No.	D	D1	H	L	L1	N	Spring force initial pressure F1 approx. N	Spring force final pressure F2 approx. N	Tightening torque approx. Nm	Loosening torque approx. Nm
K0324.1AG	8-36	1,8	1,5	9	5	0,6	2	7	0,18	0,12
K0324.1AE	8-32	1,8	1,5	9	5	0,6	3	10	0,18	0,12
K0324.1A1	10-32	2,4	2	12	6	0,8	3	10	0,12	0,08
K0324.1AJ	1/4-28	2,7	2	14	7	1	3	9	0,44	0,21
K0324.1A3	5/16-18	4	2	16	8	1,2	7	15	1,1	0,38
K0324.1A5	1/2-13	6	3,5	22	10	2	14	26	2,11	1,41
K0324.1A6	5/8-11	8,5	4,5	24	14	2,5	22	50	3,95	3,05

© KIPP Inc.

Spring Plungers with thread lock, pin style, slotted, stainless steel, light end pressure, inch

© KIPP Inc.