Positioning Feet, Style C hardened spherical surface

Item description/product images

Description

Material:
Body high carbon steel.

Version:
Body tempered and black oxidized.
Contact faces case-hardened.

Note:
These positioning feet are used as supports for rough and machined parts. They can also be used as stops and thrust pads in fixtures and toolmaking.

Drawing reference:
Style C: Spherical face hardened

Drawings

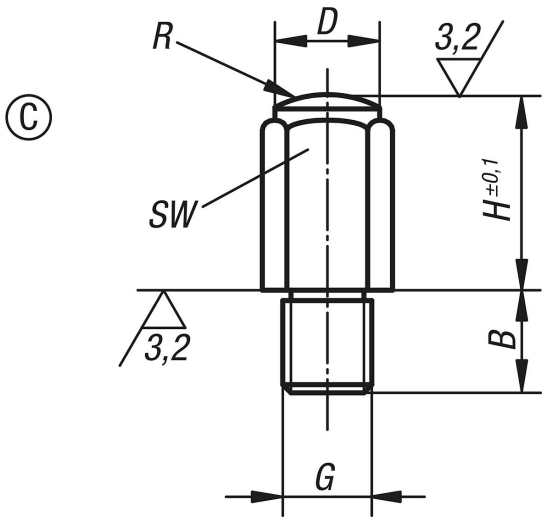

Item No.	style	B	D	G	H	R	SW
K0299.306010	C	11	10	M6	10	15	10
K0299.306020	C	11	10	M6	20	15	10
K0299.308010	C	13	13	M8	10	20	13
K0299.308015	C	13	13	M8	15	20	13
K0299.308030	C	13	13	M8	30	20	13
K0299.310010	C	16	17	M10	10	30	17
K0299.310020	C	16	17	M10	20	30	17
K0299.310040	C	16	17	M10	40	30	17

© KIPP Inc.

Positioning Feet, Style C hardened spherical surface

Item No.	style	B	D	G	H	R	SW
K0299.312010	C	20	19	M12	10	40	19
K0299.312025	C	20	19	M12	25	35	19
K0299.312050	C	20	19	M12	50	35	19
K0299.316015	C	24	27	M16	15	50	27
K0299.316030	C	24	27	M16	30	50	27
K0299.316060	C	24	27	M16	60	50	27
K0299.320040	C	29	32	M20	40	60	32
K0299.320080	C	29	32	M20	80	60	32

© KIPP Inc.