Handwheels with revolving handle, steel parts in stainless steel, Style E, with reamed hole, metric

Item description/product images

Description

Material:
Black thermoset PF 31.
Hub and revolving grip 1.4305 (AISI 303 equivalent) stainless steel bright.

Version:
High-gloss polished.

Note:
The handwheel is supplied with the grip loose.

On request:
Other reamed hole sizes.

Drawing reference:
Style E: thru bore hole

© KIPP Inc.

Handwheels with revolving handle, steel parts in stainless steel, Style E, with reamed hole, metric

Drawings

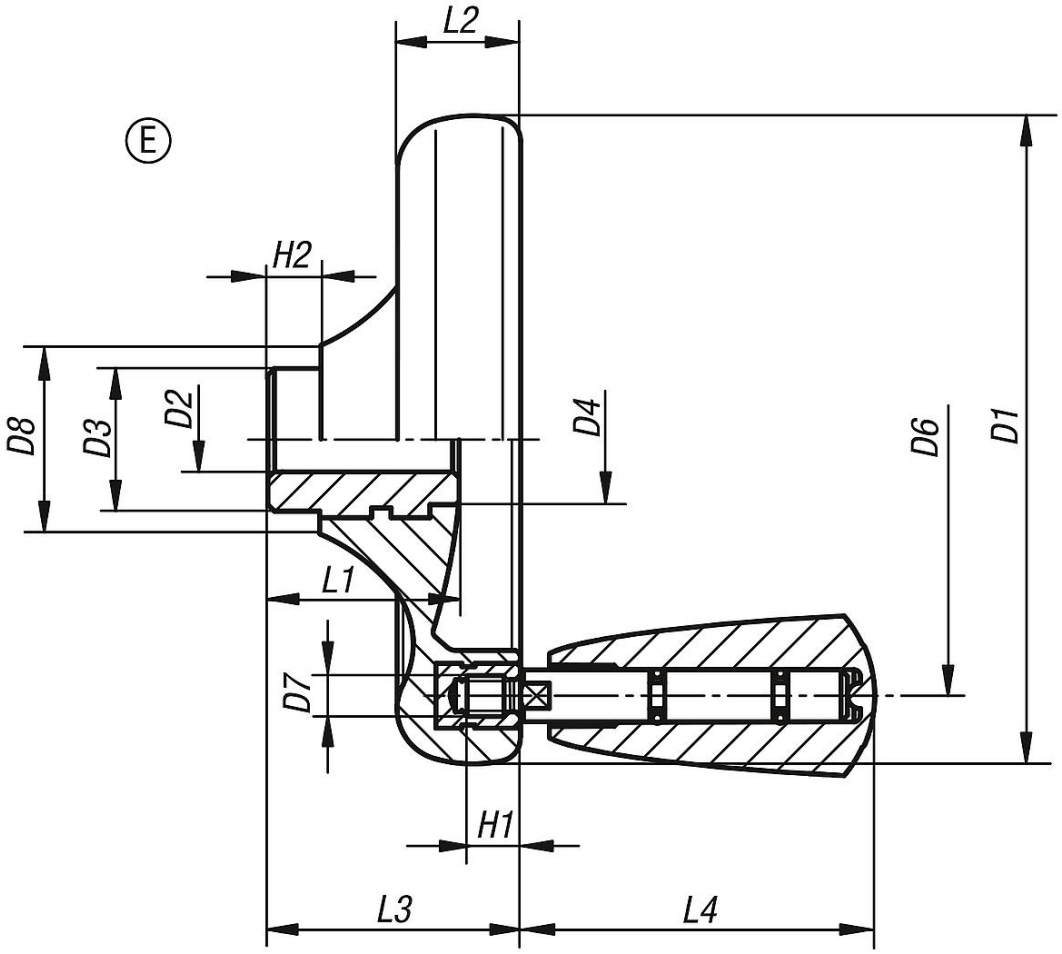

Item No.	style	Style definition	Steel parts material	D1	D2	D3	D4	D6	D7	D8	H1	H2	L1	L2	L3	L4
K0164.3100X10	E	with reamed hole	stainless steel 1.4305	100	10H7	22	20	79	M6	29	9	8	29,5	19	39	54,7
K0164.3125X12	E	with reamed hole	stainless steel 1.4305	125	12H7	26	21	101	M6	34	9	8	34	24	46	54,7
K0164.3140X14	E	with reamed hole	stainless steel 1.4305	140	14H7	30	25	110	M8	39	12	8	38,5	27	52	82,2
K0164.3160X16	E	with reamed hole	stainless steel 1.4305	160	16H7	33	30	128	M8	43	12	8	41,3	30,1	57	82,2
K0164.3160X18	E	with reamed hole	stainless steel 1.4305	160	18H7	33	30	128	M8	43	12	8	41,3	30,1	57	82,2

© KIPP Inc.