Wing grips antibacterial metal parts stainless steel

Item description/product images

Description

Material:
Thermoplastic, slate gray.
bushing and screw stainless steel 1.4305 (AISI 303 equivalent).

Version:
bushing and screw bright.

Benefits:
Resistant to humidity and cleaning products (during disinfection) with no toxic side effects.

Applications:
For installation on machines, equipment, plants and furnishings in areas with increased hygienic requirements (including hospitals, doctors' surgeries, rehabilitation centers and food production facilities), as well as for use in public areas or regularly frequented institutions (i.e. nursing homes or daycare centers).
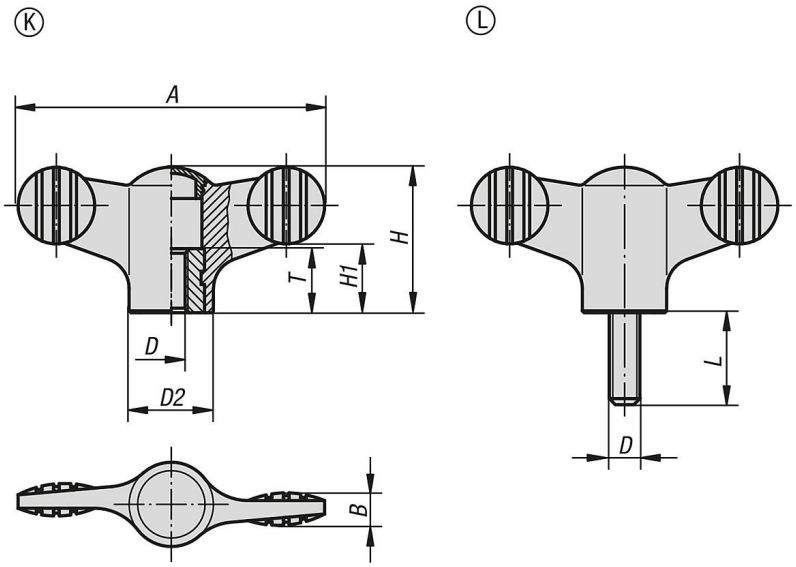
Drawings