# K1077

## Tray Handles

### Item description/product images

### Description

**Product description:**
The ergonomic style of the recessed handle is ideally suited for appliances and housings.
It is installed by pressing in and clipping into the mounting opening.

**Material:**
Thermoplastic (ABS).

**Version:**
black.

**Note:**
This handle can be used with a wall thickness of 0.75 to 1.5 mm.
The retaining force is 750 N per pair for steel and sheet steel housings.

K1077.1101 is supplied with spring clips for mounting on the inside wall of the housing.

### Drawings

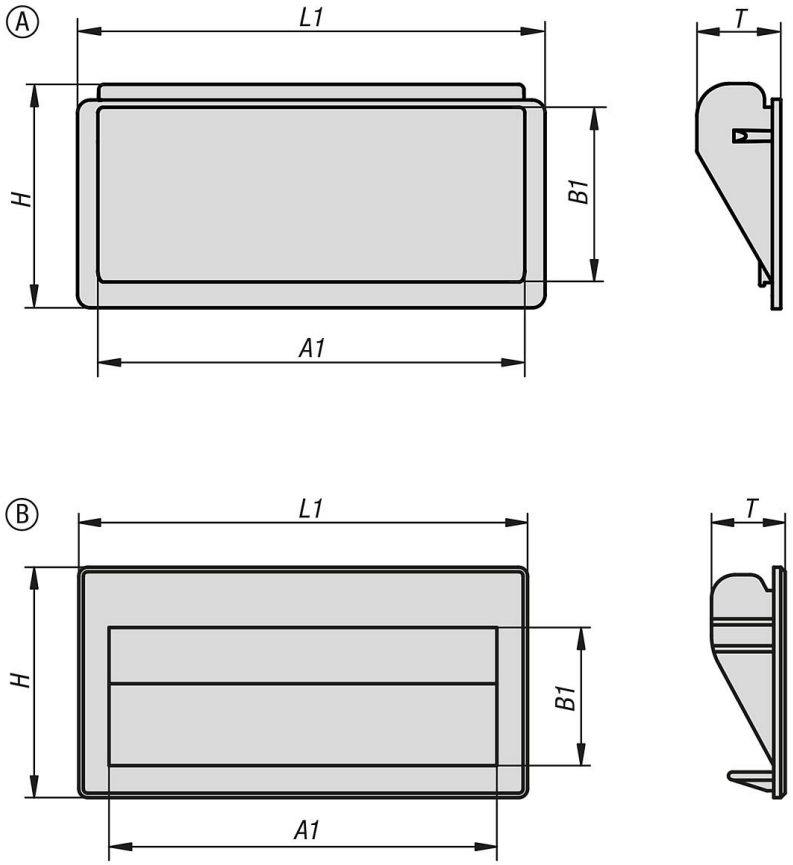


### Recessed handles

# Tray Handles

| Order No. | style | Version 2 | A1 | B1 | H | L1 | T | Mounting cutout | Load capacity N |
|---|---|---|---|---|---|---|---|---|---|
| **K1077.0901** | A | plug-in | 79 | 30 | 40 | 90 | 16 | 83 x 34 | 375 |
| **K1077.1101** | B | plug-in | 95 | 33,8 | 56,3 | 110 | 18 | 103 x 49 | 375 |

© KIPP Inc.