Balanced handles

Item description/product images

Description

Material:
Steel.

Version:
Electro zinc-plated.

Note:
Fixed handle DIN 39.

Drawings

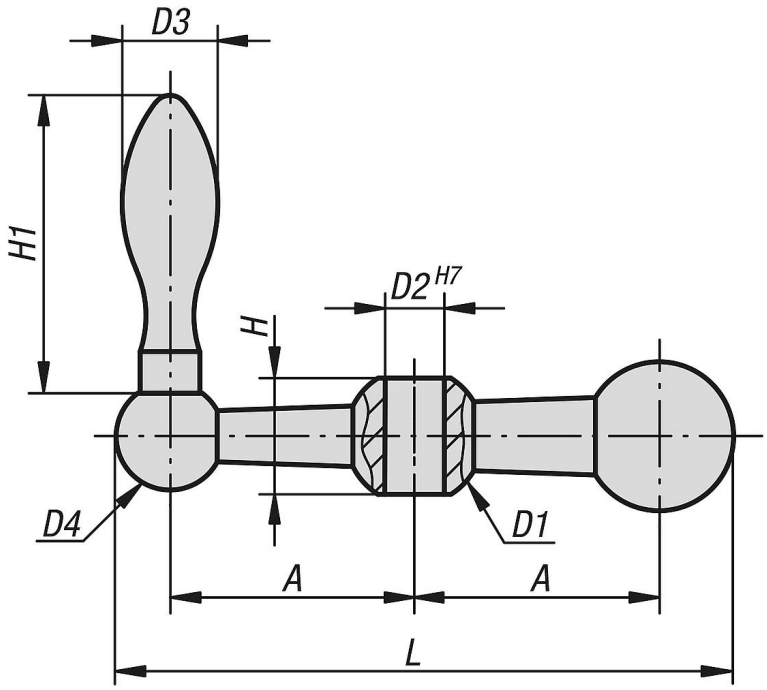

Balanced handles

Item No.	A	D1	D2	D3	D4	H	H1	L
K0728.107	25	16	7	10	13	13	32	65,5
K0728.108	34	20	8	14	16	17	46	87
K0728.110	41	23	10	16	18	19,5	50	103,5
K0728.112	50	26	12	18	20	21,5	56	124

© KIPP Inc.

© KIPP Inc.