K1195

Hinge aluminum, with adjustable friction

Item description/product images

Description

Material:
aluminum 6060 T5.
End caps PA 6.6.
Washers POM.

Version:
Black anodized

Note:
These torque hinges enable doors to remain open in any position. A set screw enables the amount of friction to be infinitely adjusted between 0-1 Nm.
Opening angle 270°.

Max. tensile strength: 2240 N
Max. shear strength: 1050 N

Fastened using DIN 7991 countersunk screws.

The loading values given for the hinges are non-binding reference values without consideration of safety factors and exclude any liability. The values given are for information purposes only and do not constitute a legally binding assurance of properties.
These load values were determined under laboratory conditions. Each user must determine individually whether the hinge is suitable for the respective application. Different materials onto which the hinges are installed and the type of mounting, weather conditions and wear can influence the determined values.

Temperature range:
From -20°C to +80°C

© KIPP Inc.

Hinge aluminum, with adjustable friction

Drawings

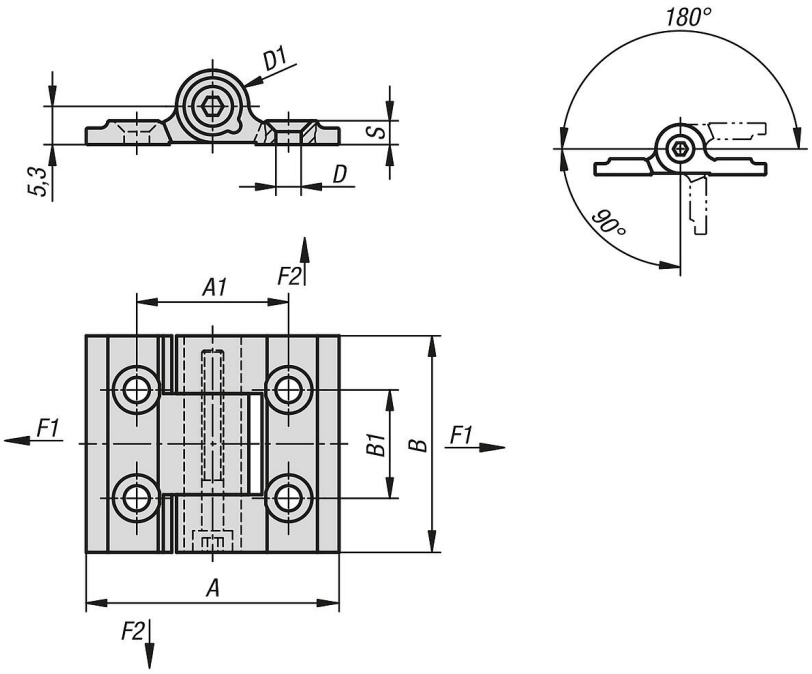

Hinge aluminum, with adjustable friction

Order No.	A	A1	B	B1	D	D1	S	F1 N	F2 N
K1195.35301	35	21	30	15	3,5	10	3,3	2460	1480

© KIPP Inc.