Handwheels gray cast iron DIN 950, without machine handle, metric

Item description/product images

METRIC Parts

Description

Material:
Handwheel gray cast iron

Version:
Wheel rim turned and polished.
Radial and axial run-out of rim < IT 12.

On request:
Hubs with square socket or powder-coated handwheels.

Drawings

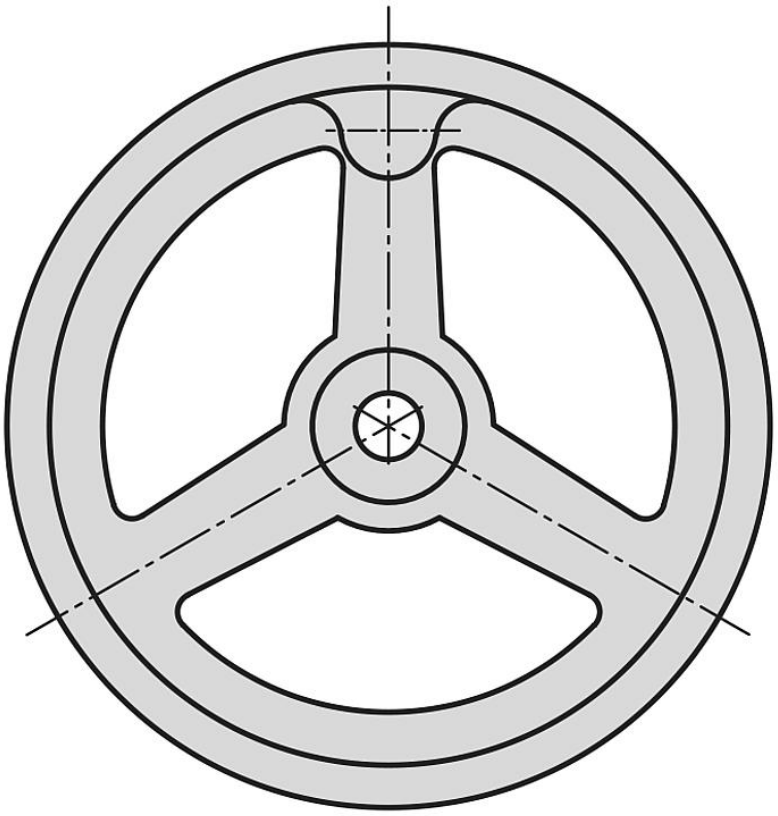

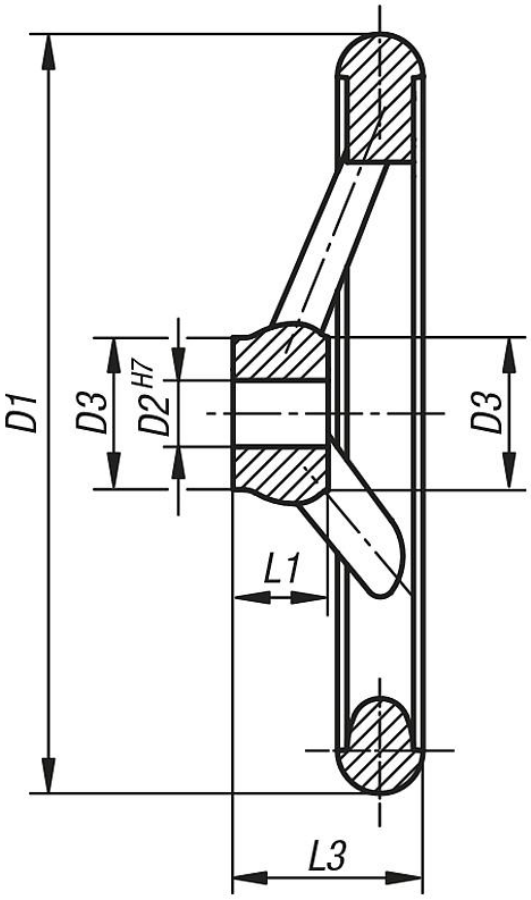

Order No.	D1	D2	D3	L1	L3	No. of spokes
K0671.0080X10	80	10H7	25	16	29	3

© KIPP Inc.

Handwheels gray cast iron DIN 950, without machine handle, metric

Order No.	D1	D2	D3	L1	L3	No. of spokes
K0671.0080X12	80	12H7	25	16	29	3
K0671.0100X10	100	10H7	26	17	33	3
K0671.0100X12	100	12H7	26	17	33	3
K0671.0125X12	125	12H7	33	18	36	3
K0671.0125X14	125	14H7	33	18	36	3
K0671.0140X14	140	14H7	33	19	39	3
K0671.0140X16	140	16H7	33	19	39	3
K0671.0160X14	160	14H7	37	20	40	3
K0671.0160X16	160	16H7	37	20	40	3
K0671.0180X16	180	16H7	36	22	43	3
K0671.0180X18	180	18H7	36	22	43	3
K0671.0200X18	200	18H7	38	24	45	3
K0671.0200X22	200	22H7	38	24	45	3
K0671.0250X22	250	22H7	46	28	50	5
K0671.0250X26	250	26H7	46	28	50	5
K0671.0315X26	315	26H7	54	33	56	5
K0671.0315X30	315	30H7	54	33	56	5
K0671.0400X30	400	30H7	68	38	63	5
K0671.0400X34	400	34H7	68	38	63	5
K0671.0500X34	500	34H7	79	45	72	5
K0671.0500X40	500	40H7	79	45	72	5
K0671.1080X10	80	10H7	25	16	29	3
K0671.1080X12	80	12H7	25	16	29	3
K0671.1100X10	100	10H7	26	17	33	3
K0671.1100X12	100	12H7	26	17	33	3
K0671.1125X12	125	12H7	33	18	36	3
K0671.1125X14	125	14H7	33	18	36	3
K0671.1140X14	140	14H7	33	19	39	3
K0671.1140X16	140	16H7	33	19	39	3
K0671.1160X14	160	14H7	37	20	40	3
K0671.1160X16	160	16H7	37	20	40	3
K0671.1180X16	180	16H7	36	22	43	3
K0671.1180X18	180	18H7	36	22	43	3
K0671.1200X18	200	18H7	38	24	45	3
K0671.1200X22	200	22H7	38	24	45	3
K0671.1250X22	250	22H7	46	28	50	5
K0671.1250X26	250	26H7	46	28	50	5
K0671.1315X26	315	26H7	54	33	56	5
K0671.1315X30	315	30H7	54	33	56	5
K0671.1400X30	400	30H7	68	38	63	5
K0671.1400X34	400	34H7	68	38	63	5
K0671.1500X34	500	34H7	79	45	72	5
K0671.1500X40	500	40H7	79	45	72	5

© KIPP Inc.