Horizontal antistatic toggle clamps with flat foot and adjustable clamping spindle

Item description/product images

METRIC Parts

Angle bracket for front face mounting (see accessories)

Description

Material:
Steel.
Grip polyamide.

Version:
Nitro-carburised and black oxidized.
Grip element graphite black.

Note:
Maintenance-free high quality link bushings.
Sustainable constant force during opening and closing.
Optimum stability through the conical, U-profile clamping arm.

Application:
Sensitive electrical or electronic equipment, components and devices (ESD sensitive elements) may be damaged or destroyed by electrostatic discharges (ESD) in the immediate vicinity.
Electrostatic discharges can come from people or through handling ESD sensitive components (e.g. during production, assembly, transport, storage etc).
Electrically conductive products which constyle to DIN EN 61340-5-1 are essential within electronic environments to prevent an electrostatic discharge.
These products can be used for ESD applications or in ESD protection areas (EPA) in accordance with DIN EN 61340-5-1.

Benefits:
- Made from a special electrically conductive plastic
- To protect sensitive electrical or electronic parts, components and devices
- Toggle clamps and power clamps are used in assembly and workholding fixtures
- Ergonomic and user-friendly grip

Accessory:
K0098

Safety:
These ESD products can also be used for devices, components and protection systems in areas where there is risk of explosion.
These ESD products prevent electrostatic spark discharges, and eliminate the risk of ignition of gases and dust which could lead to explosions in enclosed spaces.
Manufacturers and operators must apply and comply with the ATEX directives for protecting persons working in areas where there is a risk of explosion.
These ESD products have been certified by TÜV-Süd for their electrical discharge capability.

Target groups:
Device manufacturers required to constyle to ATEX product directive 2014/34/EU.
Operators required to constyle to ATEX worker protection directive 1999/92/EC.

© KIPP Inc.

Horizontal antistatic toggle clamps with flat foot and adjustable clamping spindle

Drawings

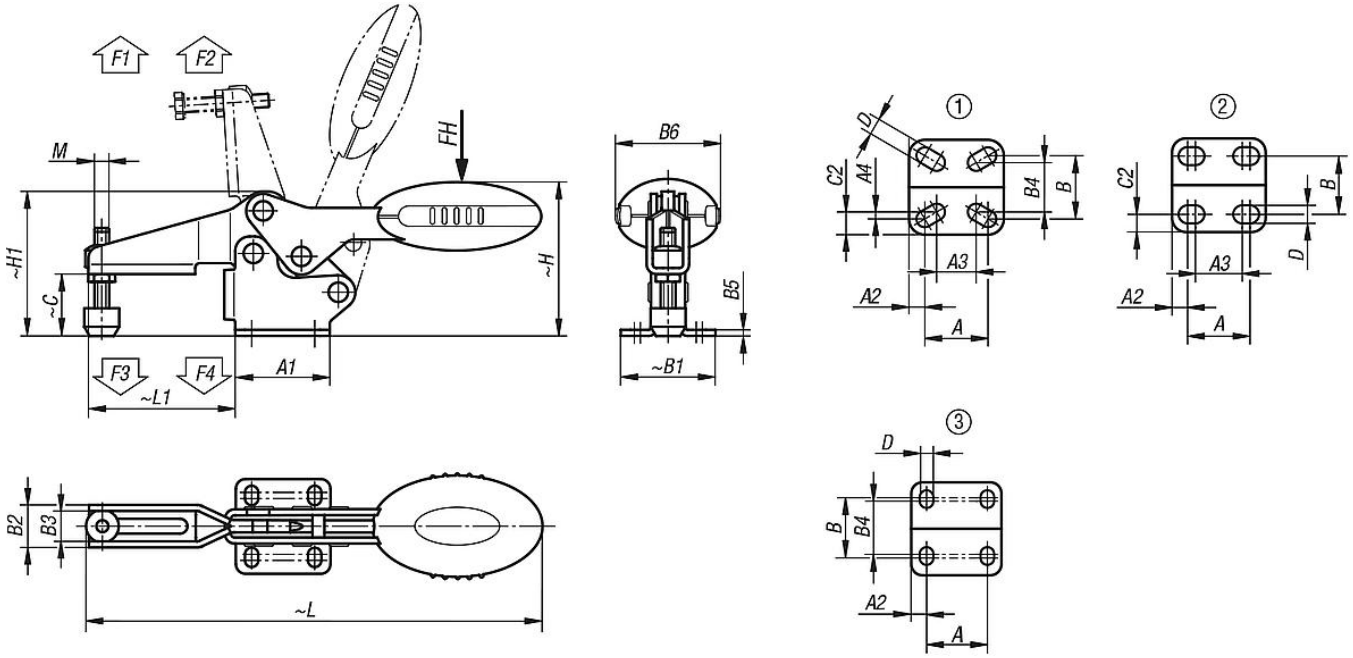

Horizontal antistatic toggle clamps with horizontal foot

Order No.	Opening angle of holding arm	Opening angle of handle	Hand force FH N	Retaining force F1 N	Retaining force F2 N	Clamping force F3 N	Clamping force F4 N	Item No. Angle Bracket
K0660.004024	87°	69°	80	400	500	250	300	K0098.02
K0660.005024	86°	67°	100	650	900	550	620	K0098.02
K0660.006024	86°	67°	160	1350	1900	720	1200	K0098.04
K0660.008024	86°	67°	200	2000	2800	830	1400	K0098.04

Order No.	hole arrangement	M	A	A1	A2	A3	A4	B	B1	B2	B3	B4	B5	B6	C	C2	D	H	H1	L	L1
K0660.004024	1	M4x16	16	24	4	12,8	0,95	16	24	10,2	7,2	14,1	1,5	20	11,7	4,95	4,2	28,7	26,3	91,8	23,7
K0660.005024	2	M5x25	18	27	4,5	13,5	-	16,8	27,3	13,2	9,2	-	2	22,5	17,2	5,25	5,5	43,4	38,9	125,7	41,8
K0660.006024	3	M6x35	26	39	6,5	-	-	28	39	17,5	12,5	23	2,5	43,5	25,4	-	5,5	63,7	59,6	186,6	60,5
K0660.008024	3	M8x45	26	44	9	-	-	31	45	21	16	24	2,5	41,5	32,2	-	6,2	73,9	70,1	223,1	74,9

© KIPP Inc.