K0631_D Metric

Indexing plungers, short version, Style D

Item description/product images

Description

Material:
Steel version:
Indexing pin hardened:
steel grade 5.8.

Stainless steel version,
Indexing pin not hardened
Threaded body and indexing pin 1.4305 (AISI 303 equivalent).

Mushroom knob red thermoplastic

Version:
Steel version:
Indexing pin hardened, ground, black oxidized.

Stainless steel version:
Indexing pin not hardened, ground, bright.

Note:
Indexing plungers are used to prevent any change in position due to lateral forces. A new locking position can only be set after the pin has been manually disengaged. style C or D is recommended for applications in which the pin is disengaged over extended periods and should be prevented from springing back.

On request:
Special versions.

Drawings

Style D
lockout type
with locknut

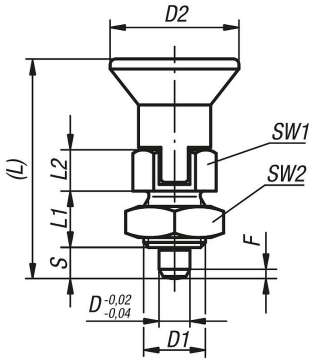

Order No.	Main material	Surface finish body	style	D	D1	D2	L	L1	L2	Travel S	SW1	SW2	Fx30°	Spring force initial pressure F1 approx. N	Spring force final pressure F2 approx. N
K0631.890384	steel	hardened	D	3	M6x0,75	14	25,5	6	5	3,5	8	10	0,8	4	10
K0631.800484	steel	hardened	D	4	M8x1	18	29,5	6	6	4	10	13	1	4	12
K0631.810584	steel	hardened	D	5	M10x1	21	34,5	8	7	5	13	17	1,3	5	12
K0631.820684	steel	hardened	D	6	M12x1,5	25	41,7	10	8	6	14	19	1,8	6	14
K0631.830884	steel	hardened	D	8	M16x1,5	33	54	12	10	8	19	24	2,3	14	28
K0631.841084	steel	hardened	D	10	M20x1,5	33	61	15	12	10	22	30	2,8	15	32
K0631.1890384	stainless steel	not hardened	D	3	M6x0,75	14	25,5	6	5	3,5	8	10	0,8	4	10
K0631.1800484	stainless steel	not hardened	D	4	M8x1	18	29,5	6	6	4	10	13	1	4	12

© KIPP Inc.

Indexing plungers, short version, Style D

Order No.	Main material	Surface finish body	style	D	D1	D2	L	L1	L2	Travel S	SW1	SW2	Fx30°	Spring force initial pressure F1 approx. N	Spring force final pressure F2 approx. N
K0631.1810584	stainless steel	not hardened	D	5	M10x1	21	34,5	8	7	5	13	17	1,3	5	12
K0631.1820684	stainless steel	not hardened	D	6	M12x1,5	25	41,7	10	8	6	14	19	1,8	6	14
K0631.1830884	stainless steel	not hardened	D	8	M16x1,5	33	54	12	10	8	19	24	2,3	14	28
K0631.1841084	stainless steel	not hardened	D	10	M20x1,5	33	61	15	12	10	22	30	2,8	15	32

© KIPP Inc.