K1778

Wheels polyamide with injection-moulded tread

Item description/product images

Description

Material:
Wheel body PA.
Tread thermoplastic polyurethane elastomer.

Note:
Wheels with polyurethane tread have a high load capacity, resist abrasion, are gentle to floors, absorb shocks and vibration and are resistant to many chemicals and acids.
Temperature resistant from -30 °C to +80 °C.
Suitable as replacement rollers for the casters K1764.

Drawings

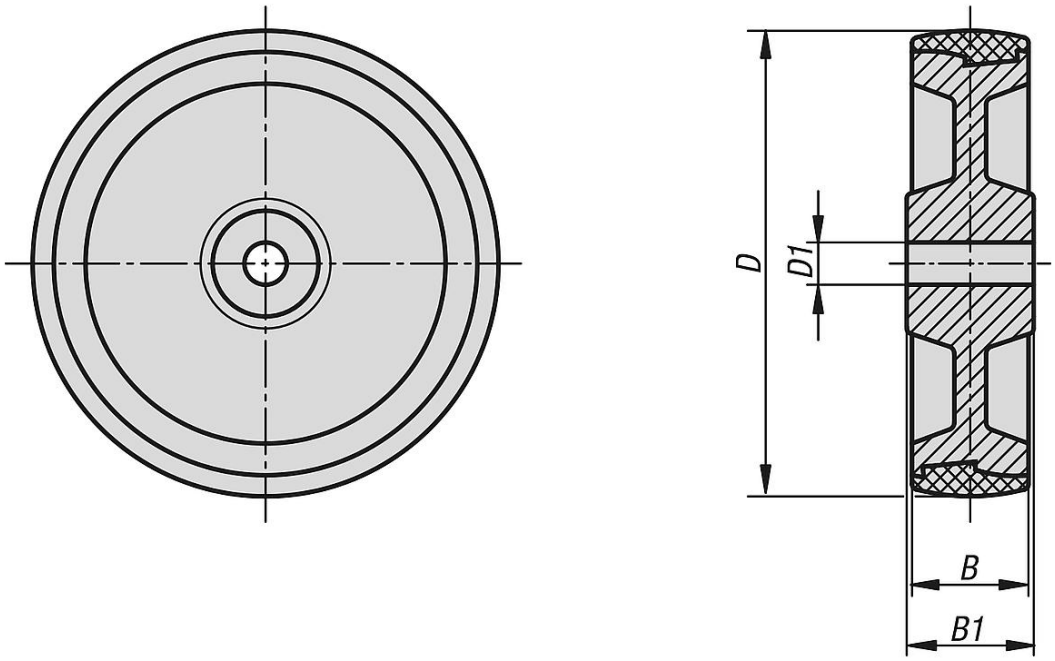

Item No.	Wheel bearing	D	D1	B	B1	Permissible load kg
K1778.10035	plain bearing	100	15	35	45	200
K1778.12535	plain bearing	125	15	35	45	250
K1778.15040	plain bearing	150	20	40	60	400
K1778.20050	plain bearing	200	20	50	60	700

© KIPP Inc.

Wheels polyamide with injection-moulded tread

© KIPP Inc.